M17 Circular connector

48V- 7.5A

Technical characteristics

Specifications	
Specifications	DIN EN 60 664 DIN EN 61 984
Approvals	

Electrical data		Mechanical date	
Number of contacts	10	Housing material	copper alloy,zinc alloy
Rated current	7.5A	Housing surface	Nickel-plated
mm^2/ AWG	(0.09-0.82mm^2 / AWG 28-18)	Contact resistance	≤ 10 mΩ
Rated voltage	48 V	Insulating bodies	PBT
Rated impulse voltage	1.5kV	Contact material	copper alloy
Pollution degree	3	Contact surface	gold plated
Flammability acc. to UL 94	V0 (UL94)	Mechanical working life	>500
Overvoltage categorie	III	Degree of protection	IP67
		Temperature range	-40°C ...+130°C

Crimp terminal

order crimp contacts separately

Contacts	Cable outlet	Designation	Order No.
10	6-9.5mm	M17-MC010-CCT/R-D9.5-SH	165 010 710 2504
	9-12mm	M17-MC010-CCT/R-D12-SH	165 010 710 2505

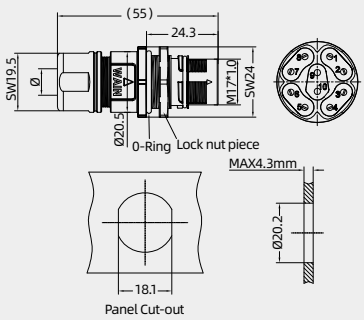

Accessories

Crimp contacts 5A

gold plated

Wire gauge(mm^2)	Male	Order No.
0.09-0.25	CSGM-0.25	101 014 210 0101
0.13-0.33	CSGM-0.33	101 014 210 0201
0.33-0.52	CSGM-0.52	101 014 210 0501
0.33-0.82	CSGM-0.82	101 014 210 0701

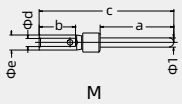

Tools

Crimping tool

Wire gauge	Designation	Order No.
0.09-0.82mm^2	TL03	198 001 001 0002

Notes: The tools for crimp terminal may influence the product quality and stability. Please select the tools recognized by our company.